STM61080P

6 STRING MODULAR COMBINER BOX PV FUSE 10A SWITCH 80A + SURGE PROTECTOR II



Code	029STM61080P
EAN	8430892289412
Product description	PV modular combiner box 6 strings + fuseholder and fuse 10A gPV + switch-disconnector 80 A + protector sobretensión clase II maximum voltage 1000Vdc, for safe installations. Double insulation class II ABS+PC box suitable for outdoor use with high impact protection (IK08). Dimensions 436x418x148mm.

Combiner box technical data

Voltage	1000 V DC
Surge protector	Tipo II
No. of strings per tracker	6
Number of MPPT trackers	1
Maximum voltage (Uoc max)	1000 V
Fuse current	10 A
Surge protector code	1 x PST31PV
Surge protector type	II
Max. continuous operating voltage (Ucpv)	1060 VDC
Nominal discharge current (In)	20 kA
Maximum discharge current (Imax)	40 kA
Protection level at In (Up)	3,6 kV
Ingress protection IP	IP65 - IEC 60529
Impact protection IK	IK08 - IEC 62262
Standards	IEC EN 6143-1/2

Dimensions

Product height	436 mm
Product width	418 mm
Product length	148 mm

Logistic data

Customs code	85371098

Connection

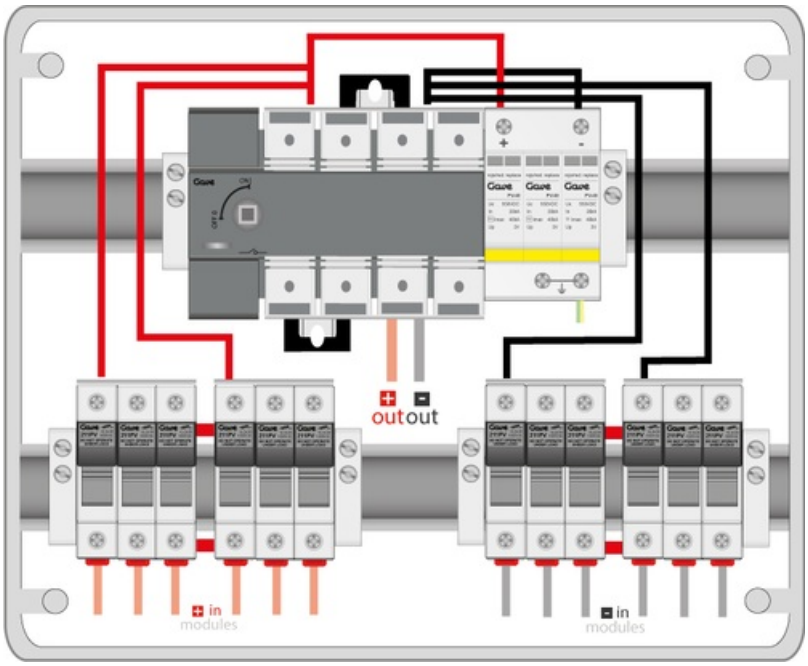

Dimensions

