STM6-780P12

6 STRING MODULAR COMBINER BOX PV FUSE 12A SWITCH 80A + SURGE PROTECTOR II UN 75VDC

Code	029STM6-780P12
EAN	8430892308137
Product description	PV modular combiner box 6 strings + fuseholder and fuse 12A gPV + switch-disconnector 80 A , surge protector Un-75V for battery systems. Double insulation class II ABS+PC box suitable for outdoor use with high impact protection (IK08). Dimensions 436x310x148mm.

Combiner box technical data

Surge protector	Tipo II
Incoming current rating	1x80A
No. of strings per tracker	6
Number of MPPT trackers	1
Fuse current	12 A
Surge protector code	PST140-75D
Surge protector type	II
Nominal discharge current (In)	20 kA
Maximum discharge current (Imax)	40 kA
Protection level at In (Up)	390 V
Ingress protection IP	IP65 - IEC 60529
Impact protection IK	IK08 - IEC 62262
Standards	IEC EN 6143-1/2

Dimensions

Product height	436 mm
Product width	418 mm
Product length	148 mm

Logistic data

Customs code	85371098

Technical data

Nominal voltage (Un)	75 V

Connection

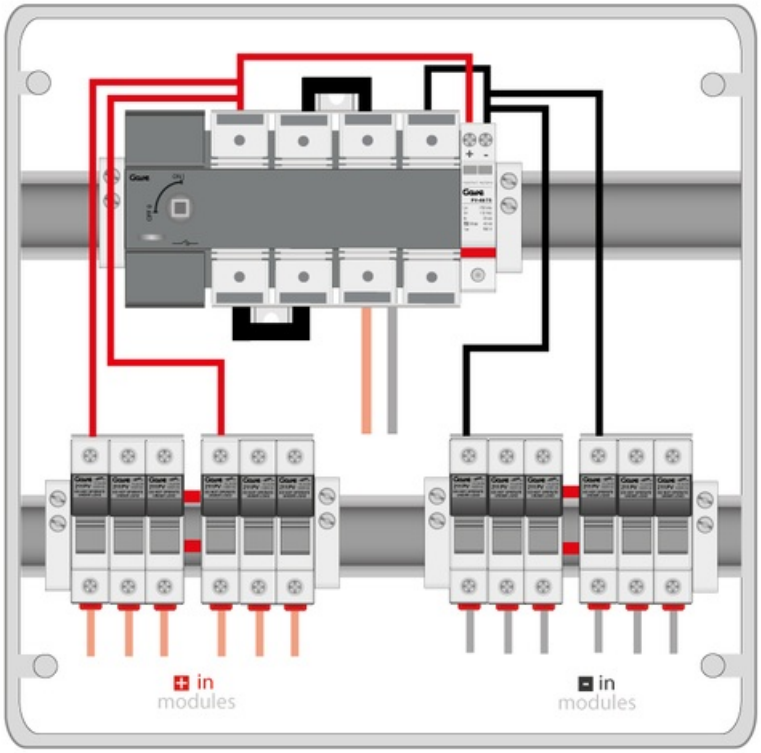

Dimensions

