ACM-E2C

AC SINGLE-PHASE COMBINER BOX ENPHASE 2 CIRCUITS



Code	029ACM-E2C
EAN	8430892317153

Combiner box technical data

MCB - Circuit breaker	20 A
Curve	C
Breaking capacity EN 60898-1	6 kA
RCCB type	A - 30mA (EN 61008-1)
Enphase devices	Q Relay + Envoy
Enphase current transformers	CT Production + CT Consumption
Inverter AC output	1P+N
Diferential type	30mA
Surge protector code	PSTC40
Surge protector type	II
Ingress protection IP	IP65 - IEC 60529
Impact protection IK	IK08 - IEC 62262

Dimensions

Product height	436 mm
Product width	418 mm
Product length	148 mm
Product weight (kg)	6.38

Logistic data

Customs code	85371098

Connection

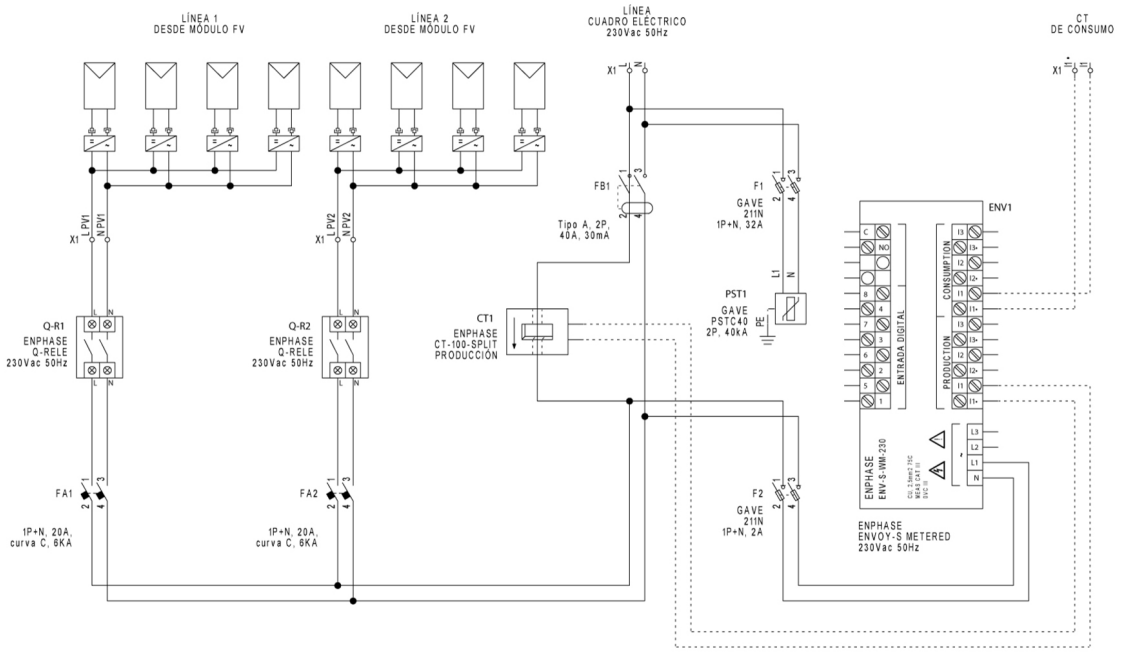

Dimensions

